Jurnal Teknik Indonesia

Volume 5 Nomor 3 September 2026

https://jti.publicascientificsolution.com/index.php/rp

Slope Stability Analysis of The Nipah Dam Embankment in Madura, Indonesia

Bakti Yudi Firmanto*, Andi Patriadi, Esti Wulandari

Universitas 17 Agustus 1945 Surabaya, Indonesia

Email: 1472500034@surel.untag-sby.ac.id*, andipatriadi@untag-sby.ac.id, wulandariesti@untag-sby.ac.id

Keywords:

Embankment Dam; Slope Stability; Factor of Safety; Seepage Analysis; Nipah Dam.

Abstract

Dam safety is essential for sustaining water supply, irrigation, flood control, and downstream community protection. Operational changes in reservoir levels may alter hydrostatic pressure, seepage conditions, and embankment stability, requiring comprehensive safety assessments. This study aimed to evaluate the slope stability and seepage safety of the Nipah Dam embankment under normal operation, raised reservoir level, rapid drawdown, and seismic loading conditions. A quantitative approach was applied using hydrological records, dam specifications, reservoir data, geotechnical parameters, and field observations. Reservoir inflow was modeled using HEC-HMS, while seepage behavior and pore-water pressure were analyzed using SEEP/W. Slope stability was evaluated using SLOPE/W based on the Bishop limit equilibrium method under static loading, Operating Basis Earthquake (OBE), and Safety Evaluation Earthquake (SEE) conditions. Under static loading, the factors of safety ranged from 2.302 to 3.209, exceeding the required criteria of 1.5 for steady-state seepage and 1.3 for rapid drawdown conditions. Under OBE loading, the factors of safety ranged from 1.623 to 2.111, while SEE loading produced values ranging from 1.001 to 1.398, satisfying the minimum criteria of 1.2 and 1.0, respectively. The piping safety factor was 5.9, exceeding the recommended value of 4.0. Therefore, Nipah Dam remained stable and safe under both existing operating conditions and the proposed 1.5-m increase in normal water level during normal operation and seismic events.

INTRODUCTION

Water resources are essential components that support the sustainability of human life, economic development, and food security. As population growth and socioeconomic activities continue to increase, demand for water resources has also risen significantly. However, suboptimal water resources management and environmental changes have reduced the carrying capacity of water systems, as indicated by increasingly extreme river discharge fluctuations, higher sedimentation rates, and declining storage capacity in various water resource infrastructures (Armus, 2021). These conditions require dam

management systems that are not only capable of meeting water demands but also ensuring the safety and reliability of dam structures throughout their service life (Swastika et al., 2022).

A dam is a hydraulic structure constructed to retain and store water, forming a reservoir that serves various purposes, including irrigation supply, raw water provision, flood control, hydropower generation, and water resources conservation (Indonesia, 2023). As high-risk infrastructure, dams must maintain embankment stability under various loading conditions throughout their operational life (Simanjuntak et al., 2026). Structural failure of a dam may result in substantial economic, social, and environmental losses; therefore, dam safety is considered a primary priority in dam management (Rosandi et al., 2023).

Dam safety is influenced by various factors, including foundation geological conditions, embankment material characteristics, pore-water pressure, seepage conditions, hydrostatic loading, and hydrological conditions within the catchment area. Consequently, periodic evaluations of dam stability are necessary to ensure that the structure continues to satisfy the required safety criteria under changing operational conditions (Maulana et al., 2020). Stability analyses are generally performed under various loading scenarios, such as normal water level, flood water level, rapid drawdown, and earthquake conditions, to assess the stability of both upstream and downstream slopes against potential failure (Margaret et al., 2023).

In addition to loading conditions, changes in dam operational conditions may also affect embankment stability. One of the common issues encountered in Indonesian dams is changes in reservoir storage capacity due to sedimentation or variations in reservoir water levels. Such changes may modify the distribution of water pressure acting on the dam body and therefore require evaluation to determine their effects on structural stability. Accordingly, stability analysis serves not only as an assessment of dam safety but also as an essential basis for decision-making related to sustainable dam operation and maintenance (Triadi & Suparta, 2020).

Nipah Dam is located on the Nipah River in Montor Village, Banyuates District, Sampang Regency, East Java Province, Indonesia. The dam was constructed to provide irrigation water, raw water supply, and flood control for the surrounding region. Construction of Nipah Dam began in 1980 with the installation of a grout curtain. Subsequently, the dam underwent redesign in 1992–1993, followed by the main construction phase between 2005 and 2007 (Sari et al., 2017). However, the dam could not be operated as originally planned due to unresolved land acquisition issues within the reservoir inundation area. As a result, the reservoir operating level was adjusted through spillway optimization in 2014, reducing the maximum reservoir water level before the dam was officially operated in 2015 and experienced its first spillway overflow event in 2016 (Musa & Ashad, 2022).

These operational modifications indicate that Nipah Dam has undergone adjustments to accommodate actual field conditions. Changes in reservoir water levels have the potential to alter the distribution of hydrostatic pressure and seepage forces

acting within the dam body, making it necessary to evaluate structural stability to ensure that the dam remains in a safe condition. Stability evaluation is particularly important because dams are critical infrastructure that must operate safely throughout their design service life without creating unacceptable risks to downstream communities or the surrounding environment (Maretha et al., 2020).

Based on these considerations, a stability analysis of the Nipah Dam embankment was necessary to evaluate the safety level of the dam slopes under various loading conditions that may occur during operation (Satrio et al., 2024). This study aimed to determine the factor of safety of the dam embankment and assess whether the existing conditions satisfied the required dam safety criteria. The results of this study are expected to provide a valuable reference for the operation, maintenance, and safety evaluation of Nipah Dam, as well as contribute to the management of other dams with similar characteristics.

METHOD

This study employed a quantitative approach incorporating hydrological and stability analyses of the Nipah Dam embankment in Madura, Indonesia. The study used secondary data, including hydrological records, dam technical specifications, reservoir morphometric data, and geotechnical parameters obtained from the Brantas River Basin Authority (Balai Besar Wilayah Sungai Brantas, BBWS Brantas) and other relevant agencies. Primary data were also collected through field observations to assess the physical condition of the dam embankment and validate existing field conditions.

Hydrological analysis was conducted using the Hydrologic Engineering Center's Hydrologic Modeling System (HEC-HMS) to estimate reservoir inflow based on rainfall data. The resulting inflow hydrograph was used as input for seepage analysis using the SEEP/W module in GeoStudio to evaluate seepage flow patterns and pore-water pressure distribution within the dam embankment. The seepage analysis results were subsequently incorporated into slope stability analysis using the SLOPE/W module to determine the factor of safety (FoS) under operational loading conditions.

The research procedure began with a literature review followed by data collection, including hydrological data, dam geometry, material characteristics, and geotechnical parameters (Cahyono & Suharyanto, 2020; Fattah & Prasetyo, 2023). Hydrological modeling was then performed using HEC-HMS, followed by seepage analysis with SEEP/W and slope stability analysis with SLOPE/W. The analysis results were evaluated based on the calculated factor of safety and compared with applicable dam safety criteria to assess the stability of the Nipah Dam embankmen.

RESULTS AND DISCUSSION

Dam Characteristics

Nipah Dam is a zoned rockfill dam with a central impervious core, constructed on a claystone and sandstone foundation reinforced by grouting. The dam has a crest elevation of +50.00 m, a foundation elevation of +27.50 m, and a structural height of

22.50 m measured from the foundation. The crest width is 7.00 m, while the total dam length is 110.85 m. The upstream and downstream slopes are designed with inclinations of 1:2.5 and 1:2.0, respectively (Alfarisy & Hardiyatmo, 2021; Ardiansyah & Iskandar, 2022). According to the updated technical documentation, the design flood discharge (Q1000) is 526.62 m³/s, whereas the Probable Maximum Flood (PMF) outflow capacity reaches 1,046.40 m³/s (Adatika et al., 2021; Dharmawangsa et al., 2023; Hardiansyah & Marsudi, 2025). The embankment consists of five material zones, namely the impervious core (Zone 1), fine filter (Zone 2), coarse filter (Zone 3), rockfill (Zone 4), and riprap protection layer (Zone 5). This zoned configuration is intended to provide adequate seepage control while maintaining the structural stability of the embankment under different loading conditions.

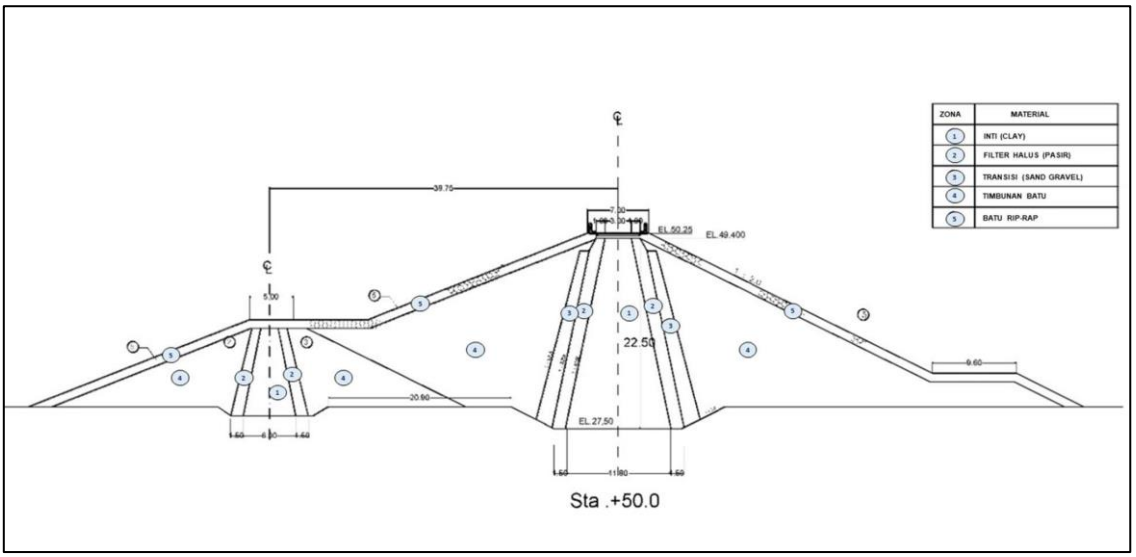

Figure 1. Nipah Dam Embankment
Source: Project Data

Embankment Dam Material Parameters

The Nipah Dam embankment, shown in Figure 2, is a zoned rockfill embankment with a vertical impervious core, having a total embankment height of 22.50 m. The embankment is divided into five zones: Zone 1 serves as the impervious core, Zone 2 as the fine filter, Zone 3 as the coarse filter, Zone 4 as the rockfill, and Zone 5 as the riprap.

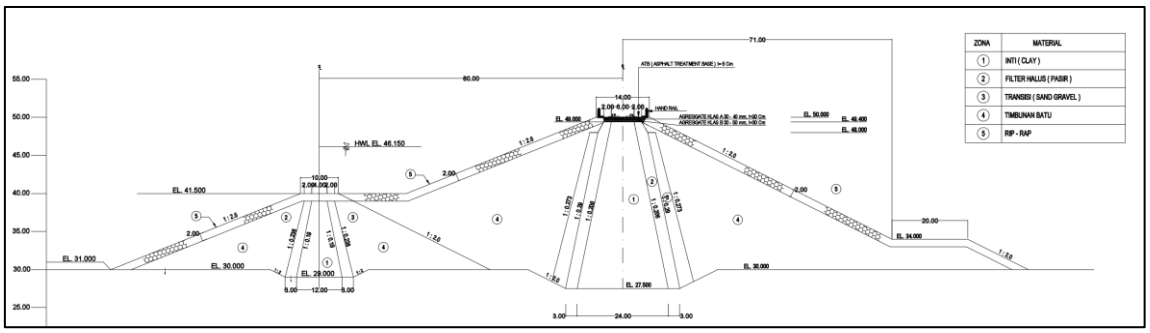

Figure 2. Zoning of the Nipah Dam Embankment
Source: Project Data

In determining the engineering parameters of the embankment materials, a review of historical construction data was conducted (Nugroho & Widodo, 2021; Pramudita & Kurniawan, 2024). A comparison of the technical properties of the embankment materials for each zone, based on data from 2002 and 2014.

Table 1. Embankment Material Properties of Nipah Dam

Description	Zone 1 (Impervious Core)	Zone 2 (Fine Filter)	Zone 3 (Coarse Filter)	Zone 4 (Rockfill)
Y *wet*	1,94	1,90	1,95	2,00
Y *sat*	1,95	2,13	2,16	2,20
K (cm/det)	$3{,}20 \times 10^{-5}$	$3{,}66 \times 10^{-2}$	$2{,}82 \times 10^{-2}$	-
C (ton/m^2)	6,80	0	0	0
ϕ (derajat)	18,55	30,0	35,00	37,00
Specific Gravity	2,60	2,60	2,60	2,33

Source: Project Data

For the riprap material, laboratory test data collected between Fiscal Years 2007 and 2014 were reviewed and compared with the results of the 2020 major inspection. The comparison is presented in Table 2.

Table 2. Riprap Material Parameters

Riprap Material Data History	Zone	Specific Gravity (SG)	Density (ton/m^3)			Friction Angle
			γ d	γ t	γ sat	ϕ(°)
Initial Impoundment, After 7-Year Suspension (2007–2014), 2014	Rip-rap (R-5)	2.33	1.75	2	2.2	37
Major Inspection, Six Years After Initial Impoundment (2014–2020), 2020	Rip-rap (R-5)	2.52	2.51	2.53	2.56	54

Source: Project Data

Based on the summary presented above, it can be concluded that the riprap material continues to satisfy the standard requirements for dam construction materials. The selection of the material parameters used in the analysis was based on the Dam Safety Evaluation Report (Certification of Nipah Dam, Sampang Regency, Madura) prepared by PT. Ika Adya Perkasa.

Table 3. Design Material Parameters of the Main Dam

No	Parameter Material	Saturated Unit Weight, γsat (kN/m^3)	Effective Cohesion, c‘ (kN/m^2)	Effective Friction, ϕ’ (°)	Permeability Coeffisient, k (cm/s)
1	Core (Zone 1)	19.50	15	18.5	3.20×10^{-5}
2	Fine Filter (Zone 2)	21.30	0	30	3.66×10^{-2}
3	Coarse Filter (Zone 3)	21.60	0	35	2.82×10^{-2}
4	Rockfill (Zone 4)	22.00	0	37	5.33×10^{-1}
5	Rip-rap	22.00	0	37	5.33×10^{-1}

Source: Project Data

Dam Geometry

Nipah Dam is a rockfill embankment dam with a clay core, having a structural height of 22.5 m measured from the foundation level. The upstream and downstream slopes are designed with inclinations of 1V:2.5H and 1V:2.0H, respectively. A cofferdam is located on the upstream side of the embankment to protect the dam body during the construction stage. Upon completion of construction, the cofferdam became an integral part of the embankment, thereby contributing to the stability of the upstream slope. The cross-section selected for slope stability analysis corresponds to the maximum dam base width located at the river valley. The geometric model used for the slope stability analysis was developed based on the as-built drawings of Nipah Dam.

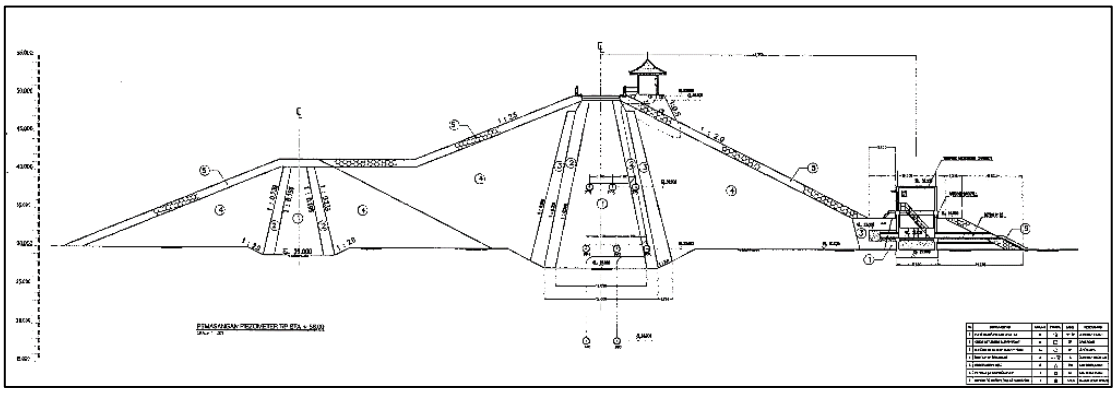

Figure 3. Cross Section of Nipah Dam Embankment (As-Built Drawing)
Source: Project Data

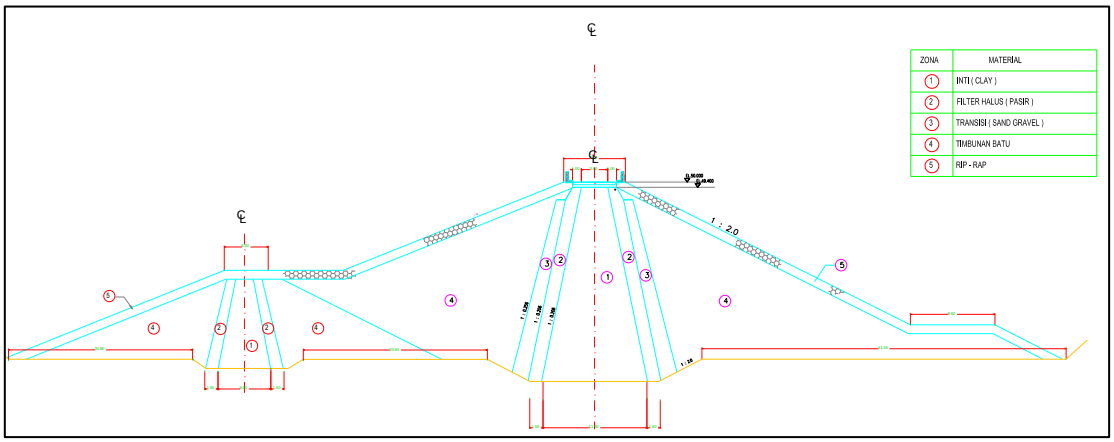

Figure 4. Numerical Model of the Nipah Main Dam Embankment
Source: Project Data

Material Characteristics of the Dam Embankment

The embankment consists of several material zones with distinct engineering properties and thicknesses. The material zoning adopted in the numerical model includes:

1. Impervious core zone, consisting of clay;
2. Fine filter zone, consisting of sand;
3. Transition zone, consisting of sand and gravel;

4. Pervious rockfill zone, consisting of rockfill material;
5. Riprap protection layer; and
6. Foundation bedrock.

The engineering properties assigned to the core material were derived from previous studies, supported by geological descriptions and available secondary data.

Loading Conditions

A comprehensive slope stability analysis was conducted by considering several critical loading scenarios that may occur during the operational life of the dam. The analyses were performed for both the upstream and downstream embankment slopes while accounting for the effects of external loads, including seismic loading. The objective was to evaluate the ability of the embankment to resist driving and uplift forces under different reservoir operating conditions. The stability analyses were performed under the following loading scenarios:

1. Normal Water Level (NWL) at Elevation +43.00 m under steady-state seepage conditions
2. Raised Normal Water Level at Elevation +44.50 m under steady-state seepage conditions
3. Rapid drawdown from the Normal Water Level of +43.00 m to the Minimum Operating Water Level (+40.00 m)
4. Rapid drawdown from the Raised Normal Water Level of +44.50 m to the Minimum Operating Water Level (+40.00 m).

Slope Stability Modeling of Nipah Dam

This study evaluates the slope stability of Nipah Dam to determine the effect of a 1.5 m increase in the Normal Water Level (NWL) on the stability of the embankment slopes. The analyses were carried out using the Bishop limit equilibrium method implemented in GeoStudio 2024.2.1.

Slope stability analyses were conducted under both static and seismic loading conditions. The seismic analyses considered two earthquake levels, namely the Operating Basis Earthquake (OBE) and the Safety Evaluation Earthquake (SEE). For each seismic condition, four reservoir operating scenarios were evaluated:

1. Normal Water Level at Elevation +43.00 m
2. Raised Normal Water Level at Elevation +44.50 m following spillway crest elevation increase
3. Rapid drawdown from +43.00 m to the Minimum Operating Water Level (+40.00 m)
4. Rapid drawdown from +44.50 m to the Minimum Operating Water Level (+40.00 m).

These scenarios were analyzed to assess the influence of reservoir level variation and seismic loading on the overall stability of the Nipah Dam embankment.

Table 4. Slope Stability Analysis Results under Static (Non-Seismic) Conditions

No.	Loading Condition	Factor of Safety (SF), Static Condition		Required SF
		Upstream Slope	Downstream Slope	
1	Steady-State Seepage (NWL +43.00 m)	2.985	2.302	1.5
2	Steady-State Seepage (NWL +44.50 m)	3.110	2.302	1.5
3	Reservoir Operation (Rapid Drawdown from +43.00 m)	3.209	2.543	1.3
4	Reservoir Operation (Rapid Drawdown from +44.50 m)	3.027	2.329	1.3

Source: Processed by the Authors

From the static slope stability analysis, all loading scenarios produced factors of safety (SFs) exceeding the minimum required values specified for each condition. Under steady-state seepage conditions, the upstream slope exhibited factors of safety of 2.985 and 3.110 for normal water levels of +43.00 m and +44.50 m, respectively, while the downstream slope maintained an SF of 2.302 for both reservoir levels. During rapid drawdown conditions, the upstream slope achieved SF values of 3.209 and 3.027, whereas the downstream slope showed SF values of 2.543 and 2.329 for initial water levels of +43.00 m and +44.50 m, respectively.

Since all computed factors of safety are significantly higher than the required criteria (SF $\geq$ 1.5 for steady-state seepage and SF $\geq$ 1.3 for rapid drawdown), the embankment satisfies the stability requirements under static loading (Armus, 2021). Furthermore, increasing the Normal Water Level by 1.5 m did not result in a significant reduction in slope stability, indicating that the proposed reservoir level increase can be accommodated without compromising the overall stability of the dam under non-seismic conditions.

Table 5. Summary of Slope Stability Analysis Results under OBE Seismic Loading

No.	Loading Condition	Factor of Safety (SF), OBE Seismic								Required SF
		Upstream Slope, y/h				Downstream Slope, y/h				
		0.25	0.5	0.75	1	0.25	0.5	0.75	1	
1	Steady-State Seepage (NWL +43.00 m)	1.625	1.750	1.812	1.878	1.623	1.702	1.739	1.777	1.2
2	Steady-State Seepage (NWL +44.50 m)	1.649	1.780	1.845	1.915	1.623	1.702	1.739	1.777	1.2
3	Reservoir Operation (Rapid Drawdown from +43.00 m)	1.842	1.976	2.041	2.111	1.666	1.746	1.784	1.823	1.2
4	Reservoir Operation (Rapid Drawdown from +44.50 m)	1.841	1.975	2.040	2.110	1.666	1.746	1.784	1.823	1.2

Source: Processed by the Authors

Table 6. Summary of Slope Stability Analysis Results under SEE Seismic Loading

No.	Loading Condition	Factor of Safety (SF), SEE Seismic								Required SF
		Upstream Slope, y/h				Downstream Slope, y/h				
		0.25	0.5	0.75	1	0.25	0.5	0.75	1	
1	Steady-State Seepage (NWL +43.00 m)	1.001	1.104	1.160	1.223	1.154	1.248	1.297	1.350	1.0
2	Steady-State Seepage (NWL +44.50 m)	1.005	1.112	1.167	1.232	1.154	1.248	1.297	1.350	1.0
3	Reservoir Operation (Rapid Drawdown from +43.00 m)	1.145	1.264	1.327	1.398	1.167	1.263	1.312	1.366	1.0
4	Reservoir Operation (Rapid Drawdown from +44.50 m)	1.145	1.263	1.326	1.398	1.167	1.263	1.312	1.366	1.0

Source: Processed by the Authors

The seismic slope stability analyses demonstrate that the Nipah Dam embankment satisfies the required safety criteria under both Operating Basis Earthquake (OBE) and Safety Evaluation Earthquake (SEE) loading conditions. Under OBE loading, all calculated factors of safety exceed the minimum allowable value of 1.2, with upstream slope SF values ranging from 1.625 to 2.111 and downstream slope SF values ranging from 1.623 to 1.823. The highest safety factors were observed under the rapid drawdown conditions, indicating that the embankment retains sufficient stability even when subjected to both reservoir drawdown and seismic loading.

Similarly, the analyses under SEE loading indicate that all computed factors of safety remain above the minimum acceptance criterion of 1.0. The upstream slope exhibited SF values ranging from 1.001 to 1.398, while the downstream slope produced values between 1.154 and 1.366. Although the safety factors under SEE loading are lower than those obtained under OBE loading, they still satisfy the design requirements for extreme seismic events.

A comparison between the existing Normal Water Level (+43.00 m) and the proposed raised Normal Water Level (+44.50 m) shows only marginal differences in the calculated safety factors. This indicates that increasing the reservoir water level by 1.5 m does not significantly reduce the stability of either the upstream or downstream slopes under seismic loading.

CONCLUSION

The slope stability analyses indicated that the Nipah Dam embankment satisfied the required safety criteria under all evaluated loading conditions. Under static loading, the calculated factors of safety (FoS) exceeded the minimum required values of 1.5 for steady-state seepage conditions and 1.3 for rapid drawdown conditions. Similarly, under seismic loading, all calculated FoS values remained above the allowable limits of 1.2 for the Operating Basis Earthquake (OBE) and 1.0 for the Safety Evaluation Earthquake (SEE). These results confirmed that both the upstream and downstream slopes remained stable against potential failure under steady-state seepage and rapid drawdown conditions.

The seepage analysis further demonstrated that Nipah Dam was safe against the risk of internal erosion (piping). The calculated critical hydraulic gradient was 0.97, while the exit gradient was 0.164, resulting in a piping safety factor of 5.9, which was significantly higher than the minimum recommended value of 4.0. Therefore, based on the combined results of the slope stability and seepage analyses, the Nipah Dam was considered structurally safe under both normal operating and seismic loading conditions, including the proposed 1.5 m increase in the Normal Water Level.

REFERENCES

Adatika, L., Suripin, S., & Darsono, S. (2021). Optimasi Operasi Waduk Dolok dengan Program Dinamik. *Briliant: Jurnal Riset Dan Konseptual*.

Alfarisy, M., & Hardiyatmo, H. C. (2021). Analisis Stabilitas Lereng Bendungan Urugan Menggunakan Metode Elemen Hingga. *Jurnal Teknik Sipil*.

Ardiansyah, A., & Iskandar, T. (2022). Evaluasi Keamanan Bendungan Berdasarkan Analisis Rembesan dan Stabilitas Lereng. *Jurnal Rekayasa Infrastruktur*.

Armus, R. (2021). *Pengembangan Sumber Daya Air*. https://www.researchgate.net/publication/357616996

Cahyono, B., & Suharyanto. (2020). Analisis Pengaruh Tekanan Air Pori terhadap Stabilitas Bendungan Urugan. *Jurnal Teknik Pengairan*.

Dharmawangsa, J., Jayadi, R., & Santoso, K. P. (2023). Optimasi Pengaturan Release Waduk Wonogiri Berbasis Neraca Air Simultan Pada Dua Tampungan Waduk Terpadu. *Jurnal Teknik Sumber Daya Air*.

Fattah, M., & Prasetyo, A. (2023). Kajian Stabilitas Bendungan dengan Pendekatan Limit Equilibrium Method. *Jurnal Infrastruktur Dan Lingkungan Binaan*.

Hardiansyah, L. R., & Marsudi, S. (2025). Analisa Stabilitas Tubuh Bendungan Muara Juloi Kabupaten Murung Raya Provinsi Kalimantan Tengah. *Jurnal Teknologi Dan Rekayasa Sumber Daya Air*.

Indonesia, M. of H. of the R. of. (2023). *Guidelines for Mental Health Services and Psychosocial Support for Children and Adolescents in Social Welfare Institutions*. Directorate General of Disease Prevention and Control of the Ministry of Health of the Republic of Indonesia.

Maretha, L., Darsono, S., & Sadono, K. W. (2020). Analisis Stabilitas dan Keamanan Bendungan Ciawi (Dry Dam) di Provinsi Jawa Barat. *Rang Teknik Journal*.

Margaret, R., Yanti, K., Patriadi, A., Rompis, N. A., & Wahab, M. F. (2023). *Potensi Penurunan Debit Banjir di Sungai Sepaku Akibat Pembangunan Bendungan Sepaku Semoi*.

Maulana, R., Hadiani, R. R., & Ikhsan, C. (2020). Analisis Pola Operasi Waduk Sangiran. *Jurnal Riset Rekayasa Sipil*.

Musa, R., & Ashad, H. (2022). Efektivitas Pengoperasian Bendungan dalam Pengendalian Banjir (Studi Kasus Bendungan Bili-Bili). *Jurnal Teknik Sipil MACCA*.

Nugroho, A., & Widodo, S. (2021). Analisis Rembesan pada Bendungan Urugan Menggunakan Pemodelan Numerik. *Jurnal Sumber Daya Air*.

Pramudita, R., & Kurniawan, D. (2024). Evaluasi Faktor Keamanan Lereng Bendungan terhadap Beban Gempa. *Jurnal Teknik Sipil Dan Perencanaan*.

Rosandi, R. A., Soepriyono, S., & Rini, T. S. (2023). Optimasi Pola Operasi Waduk Maduran Kabupaten Lamongan Provinsi Jawa Timur. *Axial: Jurnal Rekayasa Dan Manajemen Konstruksi*.

Sari, U. C., Wardani, S. P. R., Suharyanto, & Partono, W. (2017). Influence of Pore Water Pressure to Seepage and Stability of Embankment Dam (Case Study of Sermo Dam Yogyakarta, Indonesia). *MATEC Web of Conferences*, *101*, 05007. https://doi.org/10.1051/matecconf/201710105007

Satrio, R. Y., Wahyudi, S. I., & Ni'am, M. F. (2024). Evaluasi Operasi Banjir Bendungan Kedung Ombo Melalui Penelusuran Banjir Pada Bangunan Pelimpah. *Structure*.

Simanjuntak, M. A., Sriyana, & Sadono, K. W. (2026). Efektivitas Counterweight dalam Mengatasi Rembesan dan Uplift pada Bendungan Sadawarna. *Menara: Jurnal Teknik Sipil*, *21*(2). https://doi.org/10.21009/jmenara.v21i2.62283

Swastika, D., Wulandari, D. A., & Sriyana, I. (2022). Simulasi Pola Operasi Waduk Batutegi, Provinsi Lampung. *Cantilever: Jurnal Penelitian Dan Kajian Bidang Teknik Sipil*.

Triadi, I. N. S., & Suparta, I. W. D. (2020). *Pengaruh Sedimen Terhadap Pola Operasi Waduk Gerokgak di Kabupaten Buleleng*.