Jurnal Teknik Indonesia

Volume 5 Nomor 4, October 2026
pp. 917-932
DOI: https://doi.org/10.58860/jti.v5i4.960

The Role of The Flood Early Warning System in Building Community Readiness in Cirebon Regency (A Case Study of The Cisanggarung River Basin)

Juan Dinar Finasti*, Mohd. Abi Rafdi
Universitas Swadaya Gunung Jati, Indonesia
Email: juan.122210005@ugj.ac.id*, abirafdimohd@gmail.com

Keywords:
Flood Early Warning System; Community Preparedness; Non-Structural Mitigation; Cisanggarung Watershed; Internet of Things (IoT)

This is an open access article under the CC BY-SA license.

Copyright © 2026 by Author. Published by
Publica Scientific Solution

Abstract

Flooding remains one of the most frequent hydrometeorological hazards in Indonesia, with downstream areas of the Cisanggarung River Basin in Cirebon Regency facing significant flood risks due to river overflow and limited integration between technological early warning systems and community response mechanisms. Although local communities have developed preparedness practices based on traditional knowledge, the absence of an effective real-time early warning system may hinder timely evacuation responses. This study aimed to examine the role of the Flood Early Warning System (FEWS) as a nonstructural flood mitigation measure in enhancing community preparedness and to develop an Internet of Things (IoT)-based FEWS prototype for flood risk management. A mixed-methods approach was employed, integrating descriptive quantitative analysis, simple linear regression, spatial analysis using a geographic information system (GIS), and research and development (R&D) methods. Data were collected from 100 respondents in Tawangsari and Kalisari Villages, Cirebon Regency, using questionnaires assessing community knowledge, attitudes, and preparedness actions. The results indicated a high level of community preparedness, with positive responses regarding family evacuation preparations (97%), protection of important documents (95%), and movement toward designated emergency assembly points (95%). However, regression analysis revealed that FEWS performance was not significantly associated with community preparedness ($p = 0.316 > 0.05$), suggesting that other factors, including local knowledge and traditional communication systems, may play important roles in shaping preparedness behaviors. The developed IoT-based FEWS prototype incorporated real-time water level monitoring, smartphone notifications, and integration with evacuation route planning. These findings suggest that effective flood risk reduction requires the integration of technological innovations with community-based disaster risk management strategies.

INTRODUCTION

Flooding has become one of the most frequent and destructive hydrometeorological hazards worldwide, affecting human settlements, economic activities, infrastructure, and environmental sustainability (Echendu, 2023; Kaiser & Akter, 2025; Manzoor et al., 2022; Pizzorni et al., 2024). The increasing intensity of extreme rainfall events, climate variability, rapid urban expansion, and inadequate watershed management have contributed to the growing complexity of flood risks. In Indonesia, flooding remains a recurring disaster that significantly affects communities, particularly those located in low-lying areas and downstream portions of watersheds. Flood risk management, therefore, requires not only structural mitigation measures, such as river channel improvements and infrastructure development, but also nonstructural strategies that strengthen community preparedness, early warning mechanisms, and disaster response capacity. The effectiveness of flood risk reduction is strongly influenced by the availability of responsive disaster management systems and active community participation in mitigation efforts (Abid et al., 2024; Grabmaier et al., 2025; Que et al., 2022; Samuel et al., 2022).

One important nonstructural mitigation strategy is the development of a Flood Early Warning System (FEWS), which serves as a mechanism for providing timely flood warnings and supporting community decision-making before flooding occurs (Fernández-Nóvoa et al., 2024; Lovet, 2026; Mahoto, 2026; Painter et al., 2025; Tran et al., 2026). Advances in sensor technology and the Internet of Things (IoT) have enabled FEWS to monitor hydrological conditions in real time, particularly changes in river water levels. Previous studies have demonstrated that IoT-based early warning technologies can improve the accuracy and speed of flood detection by transmitting environmental data directly to users (Chavula et al., 2025; Esposito et al., 2022; Mohd et al., 2025; Sharma et al., 2025). However, the implementation of disaster information systems in several regions continues to face challenges related to spatial coverage, equipment reliability, and institutional data integration, creating a gap between technological availability and community-level disaster responses.

Globally, research on early warning systems has increasingly shifted from technology-oriented approaches toward people-centered disaster management models. Basher et al. (2006) emphasized that early warning systems should not focus solely on hazard detection but should also consider communication mechanisms, community understanding, and appropriate response actions. Similarly, studies on flood mitigation have shown that technological systems are more effective when integrated with social preparedness, local knowledge, and institutional coordination. In this context, FEWS should be understood not merely as a monitoring device but as part of a broader disaster resilience framework that connects technical information with community behavior.

In Indonesia, several studies have examined the implementation of flood early warning technologies and disaster preparedness programs. Widodo et al. (2023)

investigated the implementation of Flood Early Warning Systems as a flood mitigation strategy and highlighted the importance of technological support in reducing disaster risks. Wahyuni et al. (2022) also examined the use of flood disaster information systems to strengthen disaster-resilient communities, emphasizing the roles of information accessibility and community engagement. Furthermore, research by Lestari et al. (2024) demonstrated that flood mitigation through watershed management and FEWS utilization requires the integration of infrastructure improvements and community participation.

Despite the growing number of studies on FEWS development, most previous research has primarily focused on system engineering, technological performance, or institutional disaster management policies. Studies that specifically examine river-based FEWS as a means of improving dimensions of community preparedness, including knowledge, attitudes, and disaster response actions, remain limited. The effectiveness of early warning systems cannot be determined solely by the technical performance of devices, as social and spatial characteristics influence how communities receive, interpret, and respond to warning information. Therefore, understanding the relationship between FEWS technology and community preparedness at the watershed scale remains an important research priority.

The downstream area of the Cisanggarung River Basin in Cirebon Regency represents an important location for studying flood preparedness because the region has experienced repeated flooding caused by river overflow. Losari District, particularly Tawangsari and Kalisari Villages, has been identified as a flood-prone area due to its low elevation and location in an area where floodwaters accumulate. The flood event in March 2024, which inundated thousands of houses in Losari District, illustrates the high level of community exposure to hydrometeorological hazards. Although residents have developed adaptive behaviors based on previous experiences, evacuation decisions remain largely influenced by direct observations of river conditions and traditional communication networks.

These circumstances highlight a research gap between the availability of modern flood monitoring technologies and the actual social response mechanisms within vulnerable communities. Communities in the downstream Cisanggarung River Basin possess valuable local knowledge and experience, but the integration of technological warning systems with existing social communication structures remains insufficient. Previous studies have rarely explored how IoT-based FEWS can be integrated into local disaster response systems while considering both technological reliability and community behavioral characteristics. Therefore, further investigation is needed to develop a flood mitigation model that combines technological innovation with community-based preparedness approaches.

The urgency of this research stems from the need to develop a practical, affordable, and community-oriented flood mitigation system capable of supporting early decision-making in vulnerable areas. A reliable FEWS can provide timely warnings, reduce uncertainty during emergencies, and facilitate more organized

evacuation planning. However, the success of such systems depends on their ability to accommodate local social conditions and integrate with existing community practices. Therefore, evaluating the role of FEWS in strengthening community preparedness is essential for improving disaster resilience strategies, particularly in downstream watershed environments.

The novelty of this study lies in the integration of descriptive quantitative analysis, spatial analysis, and research and development (R&D) methods to assess community preparedness while developing an IoT-based FEWS prototype. Unlike previous studies that primarily emphasize technical system development, this research combines technological innovation with an assessment of community knowledge, attitudes, and actions in response to flood risks. The study also incorporates geographic information system (GIS)-based spatial analysis to examine the relationships among FEWS placement, community exposure, and evacuation planning.

Based on this background, this study aims to examine the role of a river-based Flood Early Warning System (FEWS) as a nonstructural mitigation measure in strengthening community preparedness for flooding in the Cisanggarung River Basin, Cirebon Regency. Theoretically, this research contributes to a broader understanding of the interaction between disaster management technologies and community resilience. Practically, it provides recommendations for developing participatory flood mitigation systems. The findings are expected to assist policymakers, disaster management institutions, and local communities in optimizing early warning mechanisms, improving evacuation preparedness, and strengthening community resilience to future hydrometeorological disasters.

METHOD

This study employed a mixed-methods approach, combining descriptive quantitative analysis based on field surveys with an experimental research and development (R&D) approach to develop a hardware prototype for a Flood Early Warning System (FEWS). Data were collected through field surveys and analyzed to assess community preparedness and support the development of the proposed system.

The research was conducted in Cirebon Regency, West Java Province, specifically in the downstream area of the Cisanggarung River Basin. The study focused on Tawangsari and Kalisari Villages in Losari District, which were selected because of their relatively flat terrain (0–8% slope) and historical vulnerability to river overflow and flooding.

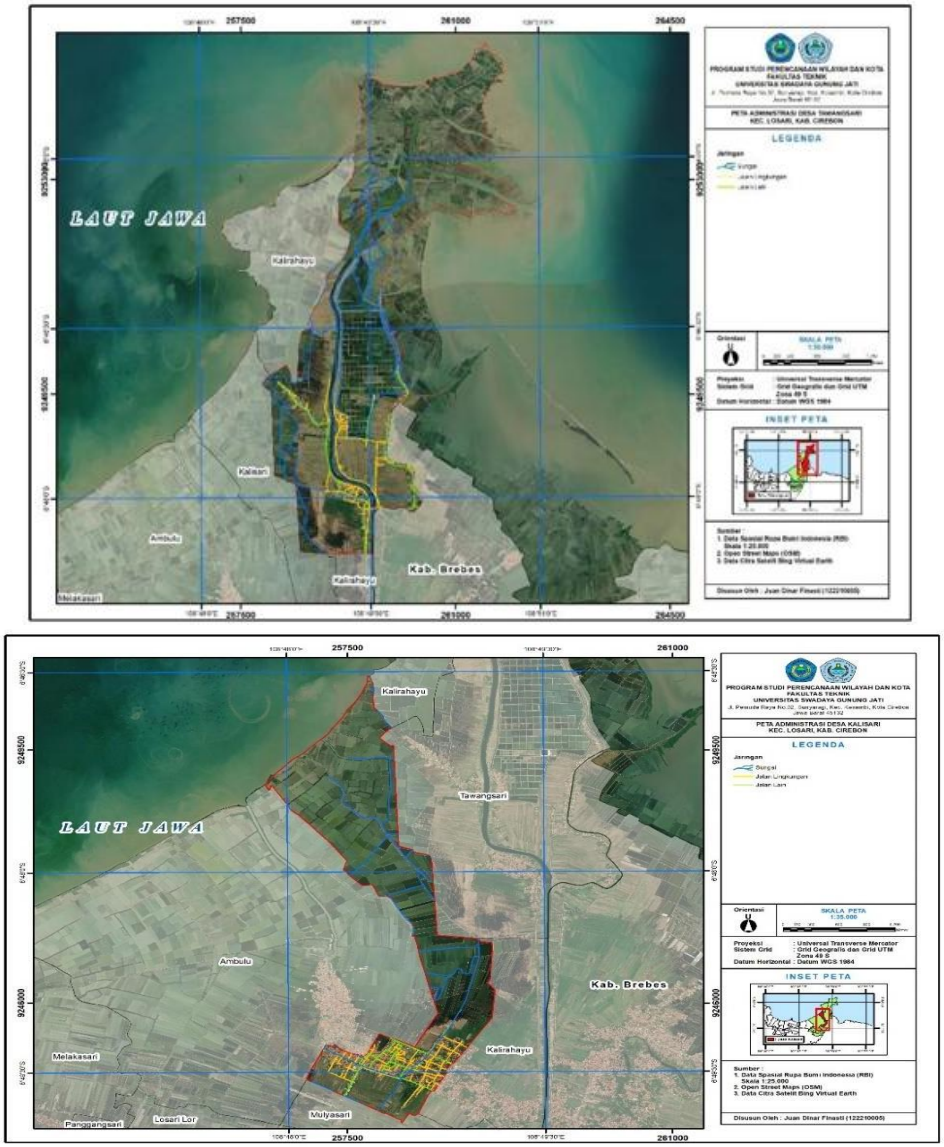

Figure 1. Map of Tawangsari and Kalisari Village Research Locations (Source: Terrain Spatial Data 2025)

The target population in this study is all heads of families (KK) who live in the flood-prone zone of the two villages. Given the large population of 16,474 people, the determination of the number of respondent samples was carried out using the Slovin formula with a *margin of error* of 0.1% or 10%. Based on this formulation, a minimum sample number of 100 respondents was obtained. The distribution of samples was carried out proportionally based on the real population base of the village, with details of 46 respondents in Tawangsari Village and 54 respondents in Kalisari Village.

Main Equipment Range and Specifications

In the technical design of this detection device, this research focuses on the main set of equipment used for water level detection analysis and data transmission, with the following technical specifications:

Table 1. Equipment Range and Specifications

Devices Soft	Sensors Ultrasonic	Microcontroller	Display	Buzzer
				
Arduino IoT Cloud Remote	SR04M waterproof ultrasonic sensor	ESP32 DEV KIT V1	0.96" OLED Display	5v active buzzer

Source: Researcher Analysis (2026)

Trial Procedure

The procedure for creating and testing the functional Flood *Early Warning System* (FEWS) device is carried out through a series of integration stages. The initial stage begins by connecting the SR40M ultrasonic sensor components, Oled display, and active buzzer on the digital pin of the ESP32 DEVKIT V1 microcontroller using a circuit configuration.

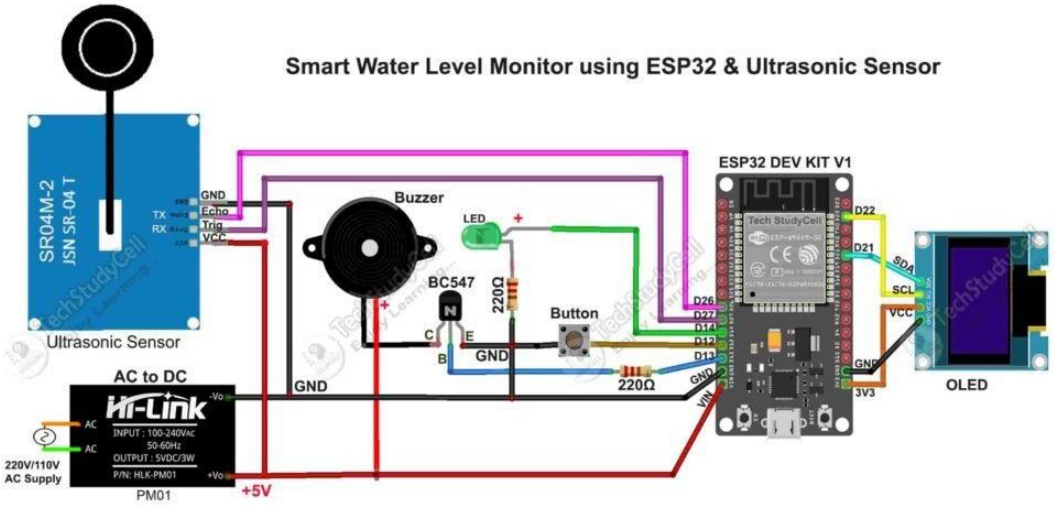

Figure 2. FEWS Programming Scheme
(Source: TechStudyCell)

Next, the programming code is injected into the microcontroller through the Arduino IDE software to activate the sensor reading algorithm as well as the Wi-fi communication protocol. Once the computing system is active, vertical distance accuracy calibration tests are performed repeatedly by comparing the sensor's digital readings against manual measuring instruments on the riverbank. As the final stage,

the entire series of ratings that have passed laboratory tests and calibration are put into an outdoor waterproof panel box, to be then permanently installed on the physical structure of the downstream bridge of the Cisanggarung watershed.

System Performance Benchmarks

The way to measure the technical performance benchmark of FEWS is based on *the Water Level Percentage* (%) parameter and the efficiency of power management through an automatic trigger system.

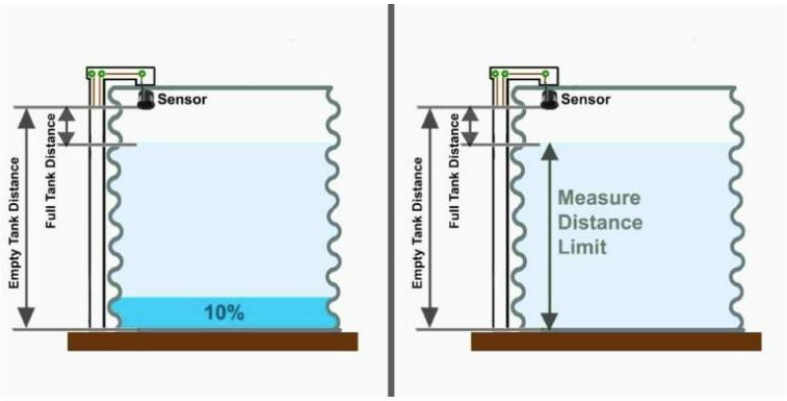

Figure 3. FEWS Trigger Scheme
(Source: TechStudyCell)

The automated tool computing system is activated to calculate fluctuations in *real-time* as soon as the water level rises and touches the minimum trigger threshold, which is when the water capacity reaches 10% of the capacity of the basic reservoir limit (*Measure Distance Limit*). Dual warning signals (gadget notifications and physical buzzers) are active when the water volume touches the critical limit of > 70%.

Data Processing and Analysis Methods

Primary data collection was carried out through the distribution of a closed questionnaire to 100 respondents using a weighted likert scale instrument of 1-5 to measure the dimensions of knowledge, attitudes, and actions of residents. The way to process the results of this field questionnaire begins with tabulating raw data to calculate the overall value and percentage technique for each behavioral indicator.

Basic statistical methods that are commonly used are the Pearson Correlaso Validity Test, Cronbach's Alpha Reliability Test, Kolmogorov-Smirnov Residual Normality Test, and Linearity Test. In order to solve the problem comprehensively, the tabulated data is analyzed using two main analysis methods:

Simple Linear Regression Analysis is used to test hypotheses regarding the presence or absence of significant influences of independent variables of FEWS Performance (X) to the dependent variable of Community Preparedness (Y) with a significance level = 0.05.

Spatial Analysis is used to map the spatial distribution of residents' preparedness scores, analyze the radius of the range of the device sirens, and compile a spatial guide map of micro evacuation routes.

RESULTS AND DISCUSSION

Socio-Demographic Profile of Respondents

To measure the variables of community preparedness for the existence of *Flood Early Warning System* (FEWS) technology, primary data collection has been carried out on 100 respondents of heads of families (KK) who are proportionally spread in the flood-prone zones of the two villages, with details of 46 respondents in Tawangsari Village and 54 respondents in Kalisari Village.



Figure 4. Distribution of Questionnaires in Tawangsari Village & Kalisari Village
Source: Researcher Documentation (2026)

Spatial approaches to non-structural disaster mitigation planning require clear visual mapping to connect the spatial technical dimension of the detection tool with the distribution of social elements exposed to risk. The integration of the coordinate points for the installation of mitigation instruments and sociological perception clusters from 100 heads of families who were observed samples in the field, the spatial distribution of the placement of tools on the banks of the Cisanggarung watershed and the geographical distribution of respondents in Tawangsari Village

and Kalisari Village are comprehensively presented in the figure below.

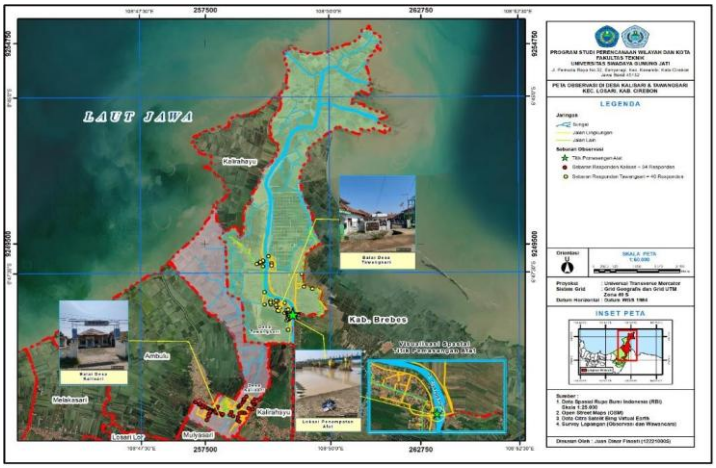

Figure 5. Distribution of Respondents & FEWS Placement Points
Source: Researcher Analysis (2026)

The sociological profile of these 100 respondents reflects the characteristics of the people downstream of Cirebon Regency who are adaptive to risks. The composition of the respondents' demographic profiles forms a sociological web that greatly influences how hazard information is processed interpersonally within the community environment.

Community Preparedness Conditions

Primary data obtained from questionnaires of 100 respondents of heads of families were tabulated to measure the parameters of the sociological capacity of the community in Tawangsari Village and Kalisari Village. The pattern of real actions (*practice)* of the community in conditioning domestic internals and immediate self-rescue after receiving the danger is shown in the details of the graph below.

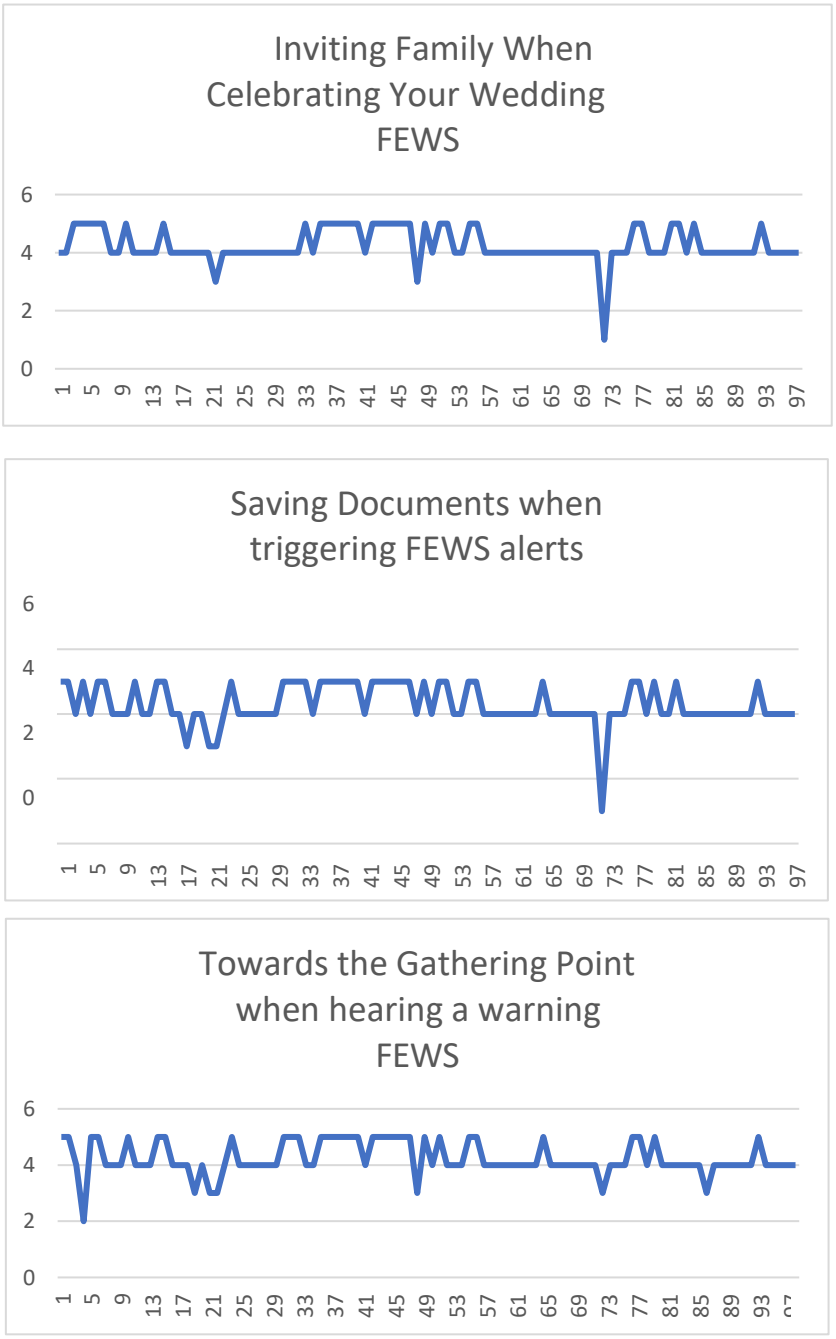

Figure 6. Graph of Community Capacity Parameters
Source: Researcher Analysis (2026)

Based on the series of data clusters in the image above, it can be seen consistently that the visualization of graph data is absolutely centered on the positive assessment range. The results of frequency extraction on the three graphs are presented as follows:

The Actions of Inviting Family: Dominated by the accumulation of positive responses reaching 97%, with details of 72 respondents choosing a score of 4 (agree) and 25 respondents choosing a score of 5 (strongly agree). There were only 2% of neutral responses (score 3) and 1% of respondents strongly disagreed (score 1).

Saving Important Documents: Shows an accumulated approval rate of 95%, which is divided into 63 respondents choosing a score of 4 (agree) and 32 respondents choosing a score of 5 (strongly agree). Neutral responses were at 4% and extreme disapproval was recorded at 1%.

Mobilization Towards Gathering Point: Shows a spatial compliance parameter of 95%, with a proportion of 64 respondents choosing a score of 4 (agree) and 31 respondents choosing a score of 5 (strongly agree). The rest of the distribution of data was distributed on a neutral response of 4% and a disagreement score (score of 2) of 1%.

Techno-Sociological Influence Analysis and Hypothesis Confirmation

To prove the logical formulation of the relationship between the FEWS Performance variables (X) for Community Preparedness (Y), inferential statistical testing was carried out through Simple Linear Regression analysis modeling. The results of the significance output of the modeling are shown in the figure below.

Table 2. Connectivity of Variables X and Y

ANOVA						
Model		**Sum of Squares**	**df**	**Mean Square**	**F**	**Say.**
1	**Regression**	2.461	1	2.461	1.018	**.316b**
	Residual	236.993	98	2.418		
	Total	**239.454**	**99**			

Source: Researcher Analysis (2026)

Based on the table above, it is known that the significance value (Sig.) for the FEWS Performance variable (X) shows the number 0.316. Through comparison with the decision-making criteria, the significance value was proven to be greater than the significance level of 0.05 (0.316 > 0.05).

In accordance with the basic principle of regression statistics, if the Sig. value > 0.05. This shows that empirically, the performance of the Flood Early Warning System (FEWS) does not have a significant influence on Community Preparedness downstream of the Cisanggarung watershed. The lack of effect of FEWS performance on residents' preparedness is statistically due to several real dynamics at the study site. The people in Tawangsari and Kalisari Villages already have local knowledge and experience. This makes residents independently prepare and evacuate themselves as soon as they see signs of nature or the river headwaters increasing, without relying on alarm stimulation from the FEWS device. The initial information transmission chain in the downstream settlement of the Cisanggarung watershed is still dominated by traditional communication between neighbors and manual announcements via mosque/prayer room loudspeakers. As a result, the existence of FEWS technical tool technology has not been the main stimulant that drives the structural preparedness response of the local community.

This basic scientific phenomenon is globally by (Basher, 2006) which confirms that early warning systems often fail to function optimally if they are only oriented to physical monitoring without adopting a community-based approach.

Intervention Planning and Strategy Direction for Strengthening

Responding to the gaps in the technical weaknesses of existing tools, this study formulated innovation engineering through the creation *of a* FEWS prototype based on *the Internet of Things* (IoT) using the ESP32 microcontroller and the ultrasonic sensor JSN_SR04M.

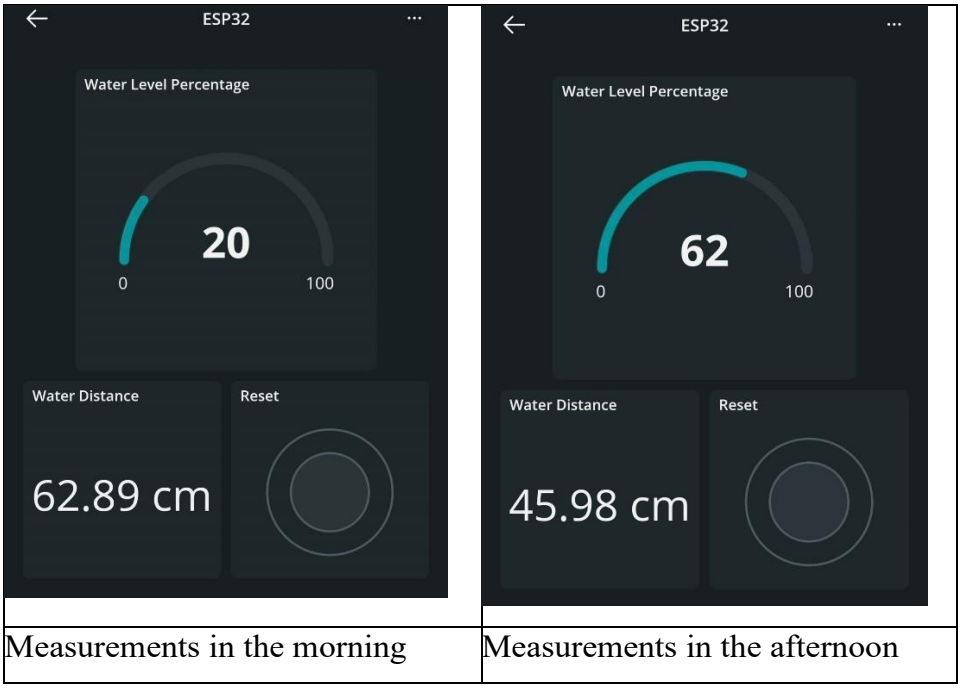

Measurements in the morning	Measurements in the afternoon

Figure 7. FEWS Monitorin Results
Source: ResearcherDocumentation (2026)

The working principle of the computational tool in Figure 5 is set using an automatic trigger system. Active ultrasonic sensors perform real-time hydrological vertical calculations when the water level rises to a threshold of 10% of the capacity of the reservoir base limit (*measure distance limit*). The results of the tool's performance tests proved to be highly responsive. In the morning (normal conditions), the sensor reads the water distance as far as 62.89 cm (*water level percentage 20%),* while in the afternoon when the discharge increases, the water distance shrinks to 45.98 cm (*water level percentage*) jumping to 62%.

This prototype wireless transmission speed successfully cuts through the bureaucratic chain of manual reporting. The water fluctuation percentage data is sent directly to the *smartphone*. This technical emergency handling step was then spatially locked through the preparation of a zoning map of the micro evacuation route in Tawangsari Village, which divided the movement of residents into two main corridors to prevent the accumulation of masses towards the gathering point in Tawangsari Village.



Figure 8. Tawangsari Village Evacuation Route
Source: Researcher's Analysis (2026)

The spatial common thread that connects the technical planning of evacuation routes with the sociological dimension of community preparedness lies in the transformation of knowledge capacity into real spatial actions (*practice*). This is reinforced by a document from the National Disaster Management Agency (BNPB, 2012) which states that the availability and understanding of rescue route maps is the main indicator of community preparedness actions in emergency response scenarios.

Based on the visualization of the mitigation guidemap in the image, the operational details of the evacuation spatial layout are described as follows:

- Evacuation Line 1 (Yellow): The shortest rescue corridor with a total mileage of -+ 343 meters
- Evacuation Line 2 (Red): Alternative corridor to prevent demographic burden with a total mileage of -+ 653 meters.

Integrated integration between IoT prototype tool information time accuracy and discipline. The mobilization of residents on this spatial guide route is expected to be able to realize the sustainable resilience of local communities in order to achieve *the zero victim* target.

CONCLUSION

This study concluded that the Flood Early Warning System (FEWS) served as an important nonstructural mitigation measure for supporting flood preparedness in the downstream area of the Cisanggarung River Basin, Cirebon Regency. The findings revealed that communities in Tawangsari and Kalisari Villages demonstrated high levels

of preparedness, as reflected in positive responses regarding family evacuation preparations (97%), the safeguarding of important documents (95%), and willingness to proceed to designated emergency assembly points (95%). However, simple linear regression analysis indicated that the performance of the existing FEWS was not significantly associated with community preparedness ($p = 0.316 > 0.05$). This finding suggested that community responses were more strongly influenced by local knowledge, direct observations of environmental conditions, and traditional communication networks, such as announcements made through places of worship, than by technological warning systems alone. The developed Internet of Things (IoT)-based FEWS prototype demonstrated the potential to strengthen future flood risk mitigation through real-time water level monitoring, smartphone notifications, and integration with spatially informed evacuation planning. Therefore, effective flood risk mitigation required not only technological innovation but also the integration of digital early warning systems with community practices and local disaster management mechanisms.

Future research should extend the analysis to broader areas of the Cisanggarung River Basin, including its upstream and middle reaches, to examine spatial variations in flood vulnerability and community responses. Further studies should also evaluate and improve the technical performance and community effectiveness of FEWS by examining warning siren coverage, community-based warning dissemination mechanisms, and detailed evacuation route planning at the local scale. Additionally, future research could investigate the integration of IoT-based early warning technologies with established local communication networks to develop more adaptive, decentralized, and participatory flood risk mitigation strategies. Strengthening collaboration among government agencies, local communities, and technology developers could enhance the reliability of early warning systems and promote community resilience to future hydrometeorological hazards.

REFERENCES

Abid, S. K., Sulaiman, N., Al-Wathinani, A. M., & Goniewicz, K. (2024). Community-based flood mitigation in Malaysia: Enhancing public participation and policy effectiveness for sustainable resilience. *Journal of Global Health*, *14*, 4290.

Basher, R., Page, J., Woo, J., Davies, M. L., Synolakis, C. E., Farnsworth, A. F., & Steacey, S. (2006). Global early warning systems for natural hazards: Systematic and people-centred. *Philosophical Transactions of the Royal Society A: Mathematical, Physical and Engineering Sciences*, *364*(1845), 2167–2182. https://doi.org/10.1098/rsta.2006.1819

Chavula, P., Kayusi, F., Lungu, G., & Uwimbabazi, A. (2025). The current landscape of early warning systems and traditional approaches to disaster detection. *LatIA*, *3*, 77.

Echendu, A. J. (2023). Human factors vs climate change; experts' view of drivers of flooding in Nigeria. *Natural Hazards Research*, *3*(2), 240–246.

Esposito, M., Palma, L., Belli, A., Sabbatini, L., & Pierleoni, P. (2022). Recent advances in internet of things solutions for early warning systems: A review. *Sensors*, *22*(6), 2124.

Fernández-Nóvoa, D., González-Cao, J., & García-Feal, O. (2024). Enhancing flood risk management: a comprehensive review on flood early warning systems with emphasis on numerical modeling. *Water*, *16*(10), 1408.

Grabmaier, I., Bittner, S., Kainz, S., Barrado, C., Bagiyan, V., Bakunts, S., & Zamora, D. (2025). Enhancing community participation in Disaster Risk Management:

Recommendations for an inclusive approach. *Open Research Europe*, *5*(50), 50.

Kaiser, Z. R. M. A., & Akter, F. (2025). From risk to resilience and sustainability: Addressing urban flash floods and waterlogging. *Risk Sciences*, *1*, 100011.

Lestari, L. W., Al Qibtiyah, N. D. M., Nugraha, I. C., Qibtiyah, M., & Shafira, S. (2024). Flood disaster mitigation through normalization of the Beringin Watershed and utilization *Flood Early Warning System* in the East Bengal Village. *Region : Journal of Regional Development and Planning Participatory*, *19*(1), 211. https://doi.org/10.20961/region.v19i1.65726

Lovet, E. A. (2026). *Early Warning System, Preparedness and Community Perception of Flood: A case of Recurrent Flood Disaster In Limbe Municipality, Cameroon*.

Mahoto, M. K. (2026). *Understanding the Flood Early Warning System for Flash Floods and its Effectiveness: The City of Windhoek Municipality Case Study*. Stellenbosch: Stellenbosch University.

Manzoor, Z., Ehsan, M., Khan, M. B., Manzoor, A., Akhter, M. M., Sohail, M. T., Hussain, A., Shafi, A., Abu-Alam, T., & Abioui, M. (2022). Floods and flood management and its socio-economic impact on Pakistan: A review of the empirical literature. *Frontiers in Environmental Science*, *10*, 1021862.

Mohd, N. N. M. S. N., Zainuddin, A. A., Shamsudin, A. U., Sapuan, M. S., Samsudin, M. H. A., & Zulkfli, M. A. H. (2025). Development and implementation of an IoT-based early flood detection and monitoring system utilizing time series forecasting for real-time alerts in resource-constrained environments. *Malaysian Journal of Science and Advanced Technology*, 30–36.

Painter, P., Semmens, K., Maxfield, K., Cattoën, C., & Carr, R. H. (2025). Designing effective flood early warning systems: A review of barriers, best practices, and key characteristics. *Journal of Flood Risk Management*, *18*(4), e70145.

Pizzorni, M., Innocenti, A., & Tollin, N. (2024). Droughts and floods in a changing climate and implications for multi-hazard urban planning: A review. *City and Environment Interactions*, *24*, 100169.

Que, T., Wu, Y., Hu, S., Cai, J., Jiang, N., & Xing, H. (2022). Factors influencing public participation in community disaster mitigation activities: A comparison of model and nonmodel disaster mitigation communities. *International Journal of Environmental Research and Public Health*, *19*(19), 12278.

Samuel, G., Mulalu, M. I., Moalafhi, D. B., & Stephens, M. (2022). Evaluation of national disaster management strategy and planning for flood management and impact reduction in Gaborone, Botswana. *International Journal of Disaster Risk Reduction*, *74*, 102939.

Sharma, N., Mahlawat, M., Sharma, M., Singh, G., Singh, A. K., & Sharma, K. (2025). Iot for Early Warning Flood System. *International Conference on ICT for Sustainable Development*, 375–387.

Tran, V. N., Huan, X., Antar, A. Das, Banovic, N., Bednar, J. H., Bergt, S. M., Cheng, C., Dominguez, F., Fatichi, S., & Gonzalez, R. (2026). Reimagining how flood warnings can inform decision-making and community actions. *Earth's Future*, *14*(6), e2026EF008857.

Wahyuni, D., Syamsunasir, S., Subiyanto, A., & Azizah, M. (2022). Utilization of Flood Disaster Information System in Bandung Regency to Create a Disaster-Resilient Society. *PENDIPA Journal of Science Education*, *6*(2), 516–521. https://doi.org/10.33369/pendipa.6.2.516-521

Widodo, W., Kusniyawati, R., Garwydan, H., Tsaqif, A. M., Susantha, F. P., Sajida, F., Primadi (2023). Penerapan Flood Early Warning System (Flews) Sebagai Upaya Mitigasi Banjir di Kelurahan Sungai Nangka Balikpapan Selatan